客户图

NOTES:
1.FINISH:
1.1 HOUSING: LCP BLACK,UL94V-0.
1.2 CONTACT: HIGH CONDUCTIVITY COPPER, INTEGRAL NICKEL BASE 50u"MIN,
GOLD (SEE P/N) PLATED IN CONTACT AERA,
GOLD FLASH PLATED IN SOLDER AREA,
1.3 GROUND: BRASS, 80u" MIN MATTE TIN PLATED OVER
2. ELECTRICAL:
2.1 RATED VOLTAGE: SIGNAL PIN AC 50 V.
POWER PIN AC 200 V.
2.2 CURRENT RATING: SIGNAL PIN 0.5A.
POWER PIN 5.0A.
2.3 DIELECTRIC WITHSTANDING VOLTAGE: SIGNAL PIN 150V AC/MINUTE.
POWER PIN 600V AC/MINUTE.
2.4 CONTACT RESISTANCE: SIGNAL PIN 60mΩ MAX.
POWER PIN 60mΩ MAX.
2.5 INSULATION RESISTANCE: SIGNAL PIN 100V DC/0.1S/100MΩ
POWER PIN 250V DC/0.1S/1000MΩ
3.SALT SPRAY TEST:
3.1 CONCENTRATION IS 5%, THE TEMPERATUREIS 35±2°C,
TEST TIME 8H MIN,NO OXIDATION OR RUST
4.MAX PROCESSING TEMP:265°C SECONDS 40S
5.OPERATION TEMPERATURE:-40°C TO +125°C.
6.WARRANTY PERIOD: 6 MONTHS
7.ORDER INFORMATION:

AA M XXX XX XXX R 2

- Pin数码: SEE TABLE 020=2x10PIN ~ 120=2x60PIN
- 端子电镀: G0=Gold Flash(全金) G1=1u" Gold G2=3u" Gold G3=5u" Gold G4=10u" Gold G5=15u" Gold G6=30u" Gold
- 塑胶高度: 069=6.90mm("H1") 089=8.90mm("H1") 109=10.90mm("H1")
- 包装方式: R=TAPE REEL

TABLE:

No. OF PIN	A	B	C	D	E
020=2x10PIN	17.10	5.88	4.50	9.30	15.00
030=2x15PIN	19.60	8.38	7.00	11.80	17.50
040=2x20PIN	22.10	10.88	9.50	14.30	20.00
050=2x25PIN	24.60	13.38	12.00	16.80	22.50
060=2x30PIN	27.10	15.88	14.50	19.30	25.00
080=2x40PIN	32.10	20.88	19.50	24.30	30.00
100=2x50PIN	37.10	25.88	24.50	29.30	35.00
120=2x60PIN	42.10	30.88	29.50	34.30	40.00

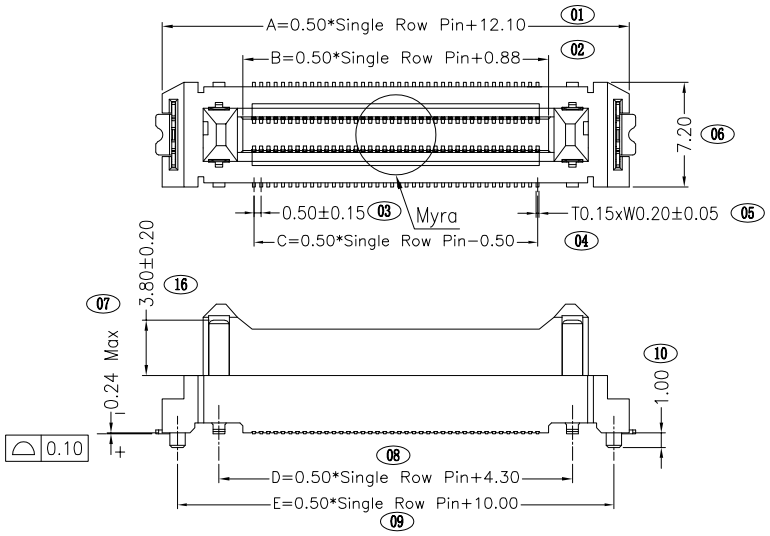

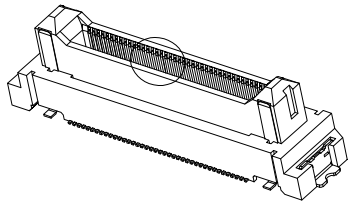

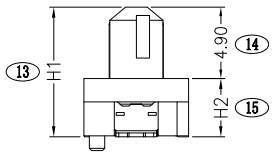

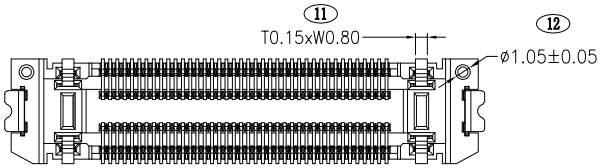

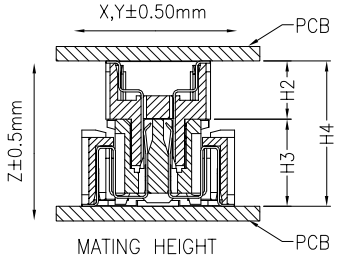

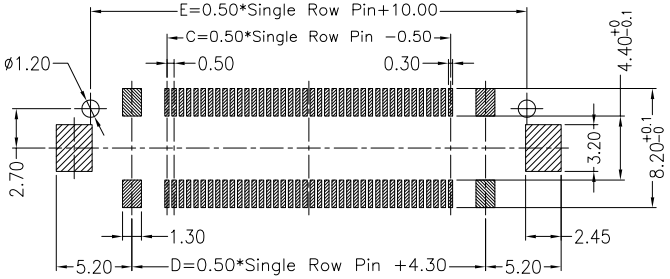

RECOMMENDED PCB LAYOUT(TOP SIDE)
PCB BOARD TOLERANCE±0.05

MATING HEIGHT	H1	H2	H3	H4
8.0mm	6.90	2.00	6.00	8.00
10.0mm	8.90	4.00		10.00
12.0mm	10.90	6.00		12.00

REV	DATE	MODIFICATION DESCRIPTION	CHANGE	APPROVE
A2		NEW	———	———

OPERATION				
X.X	±0.40	DRAW	WLY	2023.03.14
X.XX	±0.25	DESIGN	Jensen	2023.03.14
X.XXX	±0.15	CHECK	Jack	2023.03.14
Angle	±3°	APPROVE	Andy	2023.03.14
DIM.	TOL	UNIT	mm	SCALE 1:1

CONSHARE

SIZE	A4	PART NO.	AAMXXXXXXXXR2
SHEET	1/1	TITLE:	0.50mm 浮动BTB 公头 直立式SMT TYPE
PROJ.		DRAW NO.	134