HDMI CONNECTOR FEMALE

REV.	ECN NO.	DESCRIPTION	DATE	DESIGN
A0		NEW	2019.7.28	PACK

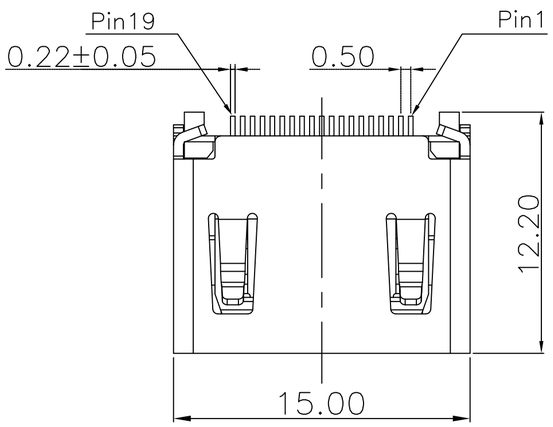

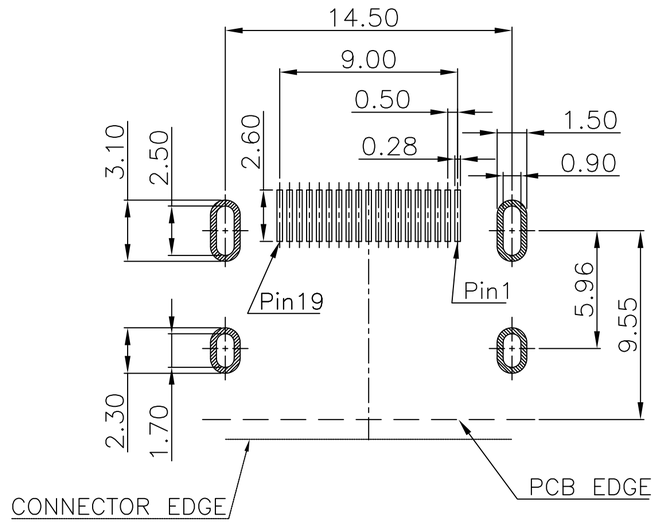

RECOMMENDED PCB LAYOUT (TOP VIEW)

TOLERANCE: ±0.05mm

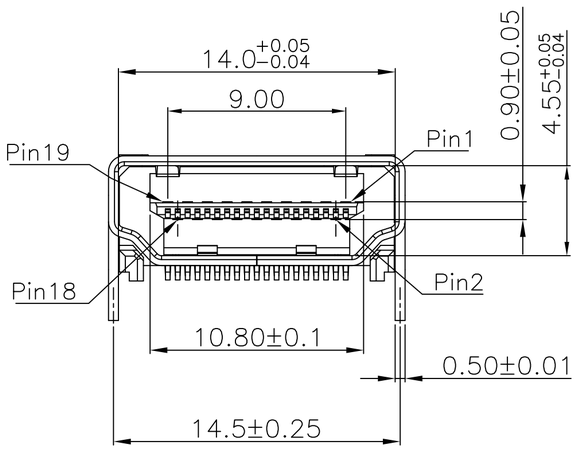

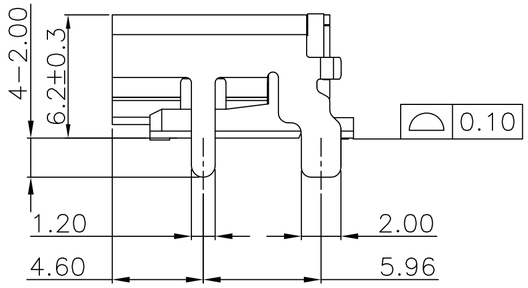

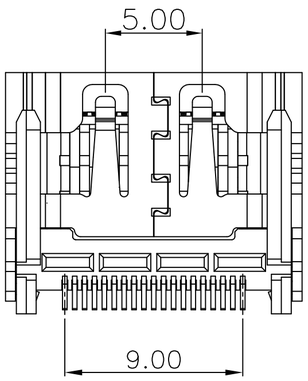

SPECIFICATIONS:

1. ELECTRICAL CHARACTERISTICS
   - 1−1. CURRENT RATING: 0.5 AMP
   - 1−2. VOLTAGE RATING: 40 V
   - 1−3. CONTACT RESISTANCE: 30MILLIOHMS MAX
   - 1−4. INSULATION RESISTTANCE:100M MIN.@500V DC
   - 1−5. DIELECTRIC WITHSTANDING VOLTAGE: 500V AC FOR 1 MINUTE
2. MECHANICAL CHARACTERISTICS:
   - 2−1. INSERTION FORCE : 4.5KGF MAX.
   - 2−2. WITHDRAWING FORCE : 1KGF ~ 4KGF.
3. LIFE TEST: 10000 CYCLES
4. OPERATING TEMPERATURE: −25°C TO +85°C
5. PART NO. DESCRIPTION:

HDMI SMT Molding式成品料号

AB □□ □□ □ □ □ □ □ □ □

① SERIES NO:
18 : SMT molding式

② 外壳材质:
1. 黄铜
2. 铁材（光面）
3. 铁材（麻面）
4. S50C
5. 磷铜
6. 不锈钢

③ 外壳：电镀
1. NICKEL PLATED(鐵殼全部鍍可焊鎳最小80u″.)
2. GOLD FLASH PLATED
3. GOLD PLATED 0.6u″
4. GOLD PLATED 足1u″
5. GOLD PLATED 足3u″
6. 镀亚光镍（连续鍍）

④ 端子:电镀规格
1 接触端1u"金， SMT端 亮锡
2 接触端3u"金， SMT端 亮锡
3 接触端5u"金， SMT端 亮锡
4 接触端15u"金， SMT端 亮锡
5 接触端30u"金， SMT端 亮锡
6 接触端1u"金， SMT端 1u"金
7 接触端1u"金， SMT端 雾锡
8 接触端3u"金， SMT端 雾锡
9 接触端15u"金， SMT端雾锡

⑤ 塑胶类型:
A: A款普通无柱 黑胶
D: 有柱D款(中心距5.0) 黑胶
E: 有柱E款(中心距5.0) 黑胶
(D款基础往端子方向移动0.5)
F: 壳翻边高度7.3，塑胶加长款一
G: 壳翻边高度9.35，塑胶加长款二

⑥ PIN 脚的长度:
1: 1.7 mm
2: 1.5 mm

⑦ 特殊要求:
0:NO MARK
1:DATE CODE
2:E款弹片(NO MARK)
3:贴麦拉（NO MARK）

⑧ 外壳流水号:
0.无螺孔: 0XX
1.螺孔高8.8mm 宽8.0mm M2*0.4:1XX
2.螺孔高10.38mm 宽8.0mm M3*0.5:2XX
3.螺孔高11.3mm 宽8.0 8.7mm M3*0.5: 3XX
4.螺孔高12.3mm 宽9.2mm&10.5mm M3*0.5: 4XX
5.螺孔高13.38mm 宽8.0mm M3*0.5: 5XX
6.螺孔高10.8mm 宽10.0mm M2.5*0.5: 6XX

NO	PART NAME	QTY	MATERIAL PLATING & COLOR
C	SHELL	1	C2680R−H Ni 50u" T=0.5mm PLATING ALL OVER
B	TERMINAL	19	C2680R−H SEE PART NO.
A	HOUSING	1	LCP E130i UL94V−0 BLACK

GENERAL DIMENSIONAL TOLERANCE
.X =±0.35 .° =±2.0°
.XX =±0.25 .X° =±1.5°
.XXX=±0.15 .XX°=±1.0°

PROJECTION | UNIT mm

SIZE A4 | SCALE 1:1

CONSHARE

D.R.	PACK	2019.7.28
CH.K	JHON	2019.7.28
APV.D	JHON	2019.7.28

NAME: HDMI SMT Molding式铜壳镀镍四直脚四反弹片，脚长2.0,有耳，胶无柱 端子半金雾锡1u″

PART NO. AB18117A102

FILE NO. | SHEET 1 OF 1 | REV. A1

CUSTOMER