REV.	ECN NO.	LOCATIONS	DESCRIPTION	DATE	DESIGN
A			出版发行	12/03/02	DANNY DENG
B			更正引脚序号	24/04/09	FH

RoHS Compliant GP

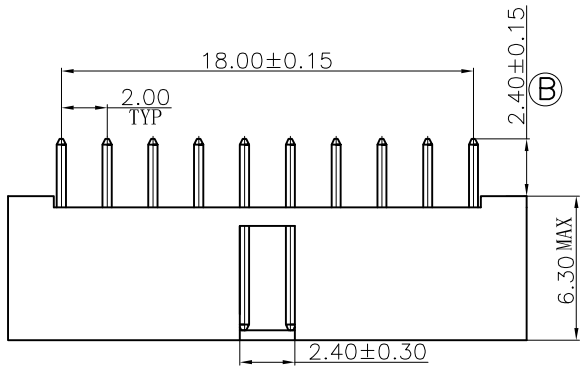

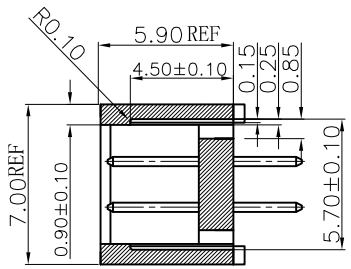

A-A
SCALE 1:1

NOTES:
MATERIALS:
1.HOUSING:NY6T,(UL94V-0),COLOR:BLACK
2.CONTACT:BRASS.
FINISH;
CONTACT:GOLD FLASH ALL OVER,
50U"NICKEL UNDER PLATED ALL OVER.

PART SYSTME:

AW R H 41**** ***

- R:普通環保料
- H:BOX
- PIN距: 0: 4.2MM, 2:2.54MM, 4:2.00MM, E:其它
- 形狀: 1: 180D, 2: 90D
- ROW*SINGLE POS
- CONTACT FINISH: 0:G/F, 1:3~5u", 2:8u", 3:15u"
- COLOR: L:BLUE, B:BLACK
- CUT PIN

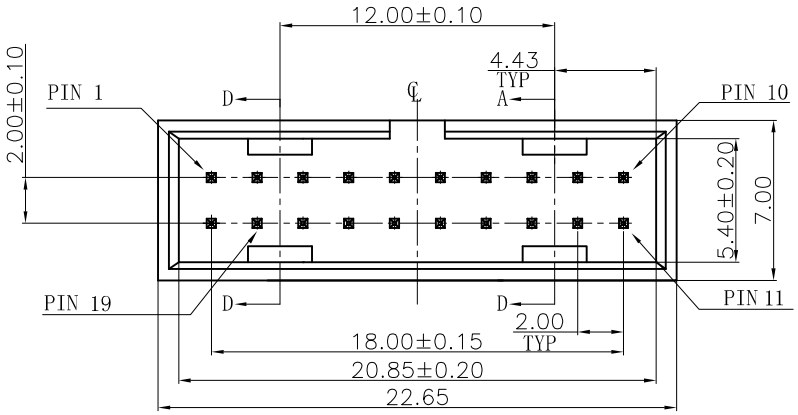

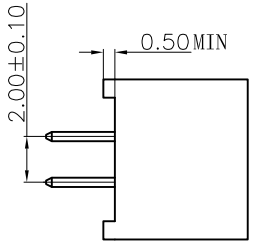

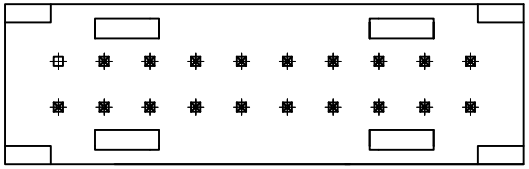

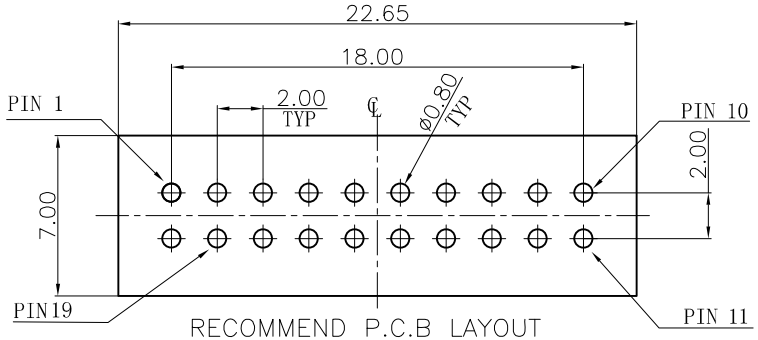

RECOMMEND P.C.B LAYOUT
HOLE LAYOUT

DIM	TOL	DIM	DEG
X.	±0.30	X°.	±3°
X.X	±0.25	X.X°	±2°
X.XX	±0.20	X.XX°	±1°
X.XXX	±0.10	X.XXX°	±0.5°

DANNY DENG

CONSHARE

DRAW NO.	A-07-0123	DATE	MATERIAL: SEE NOTES		DRAW NAME: USB 3.0 BOX(P=2.00) 2*10P CUSTOMER DRAWING
DESIGN:	DANNY DENG	12/03/02	FINISH: SEE NOTES		
CHECK:	COCO	24/04/09	FILE:		
REVIEW:	JACK	24/04/09	P/N NO. AWRH412100L20		MODEL:
APPROVED	MIKE	24/04/09	REV. B	SCALE N/A	UNIT: mm / SHEET: 1/1